CSC BEARING GROUP limited

SIGMA ESA 20 0644 Ball bearing

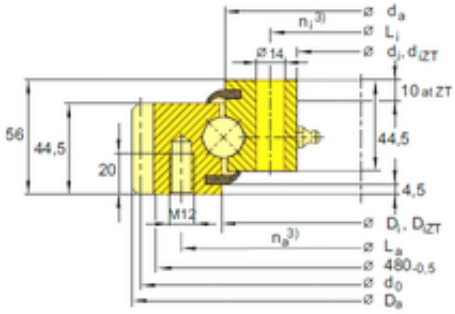

ESA 20 0644 Bearing 2D drawings and 3D CAD models

Bearing No. **ESA 20 0644**

Bore Diameter	572 mm
Outer Diameter	742,3 mm
d	572 mm
D	742,3 mm
Da	742,3 mm
Z	122 mm
m	6 mm
di	572 mm
diZT	574 mm
Di	645,5 mm
DiZT	647 mm
da	642,5 mm
La	685 mm
na	32 mm
ni	36 mm
Li	598 mm
d0	732 mm